1996-98 CHEROKEE (2.5L/4.0L) ENGINES SCHEMATIC

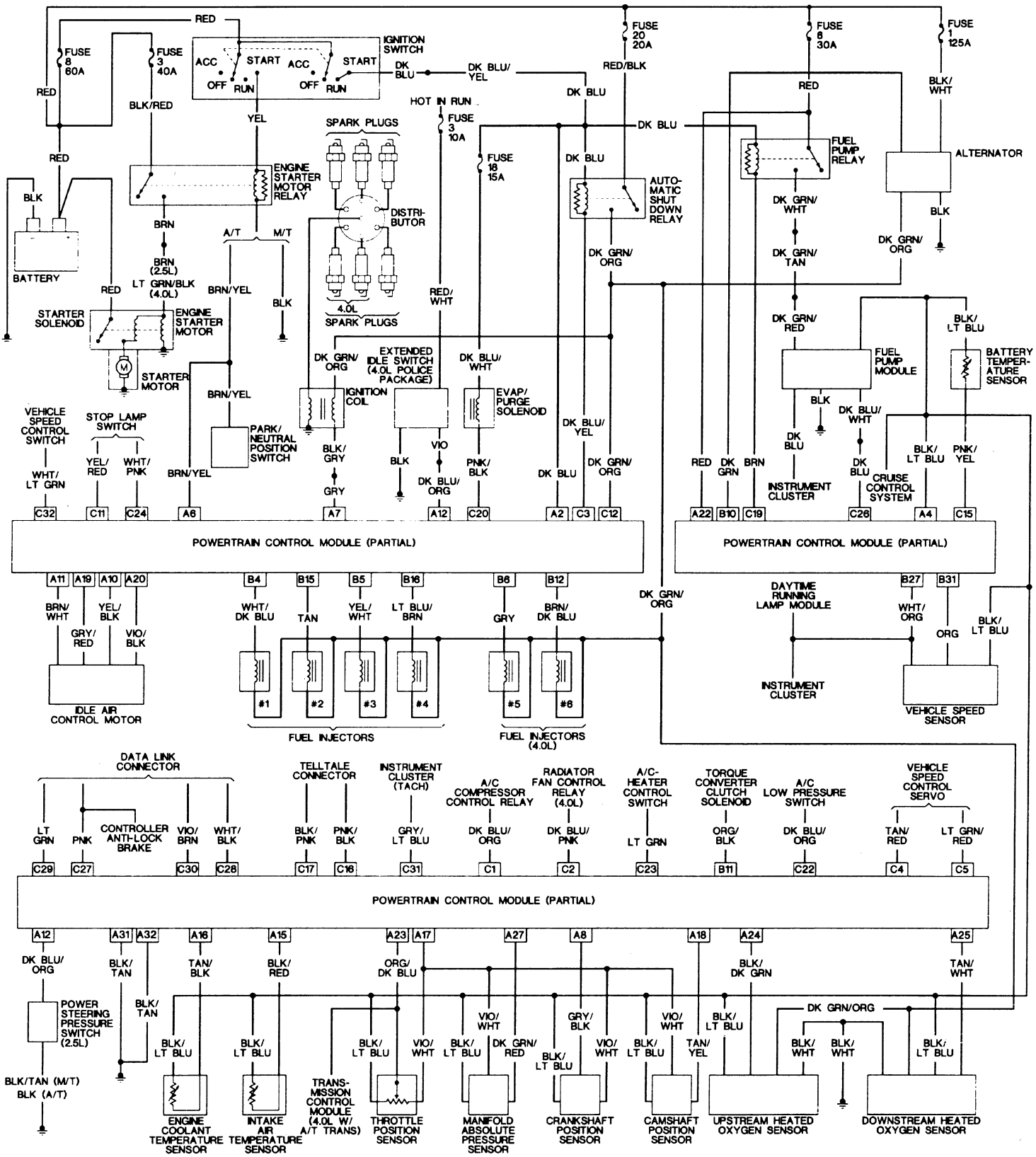

DIAGRAM 32