1986 CHEROKEE/WAGONEER CHASSIS SCHEMATICS

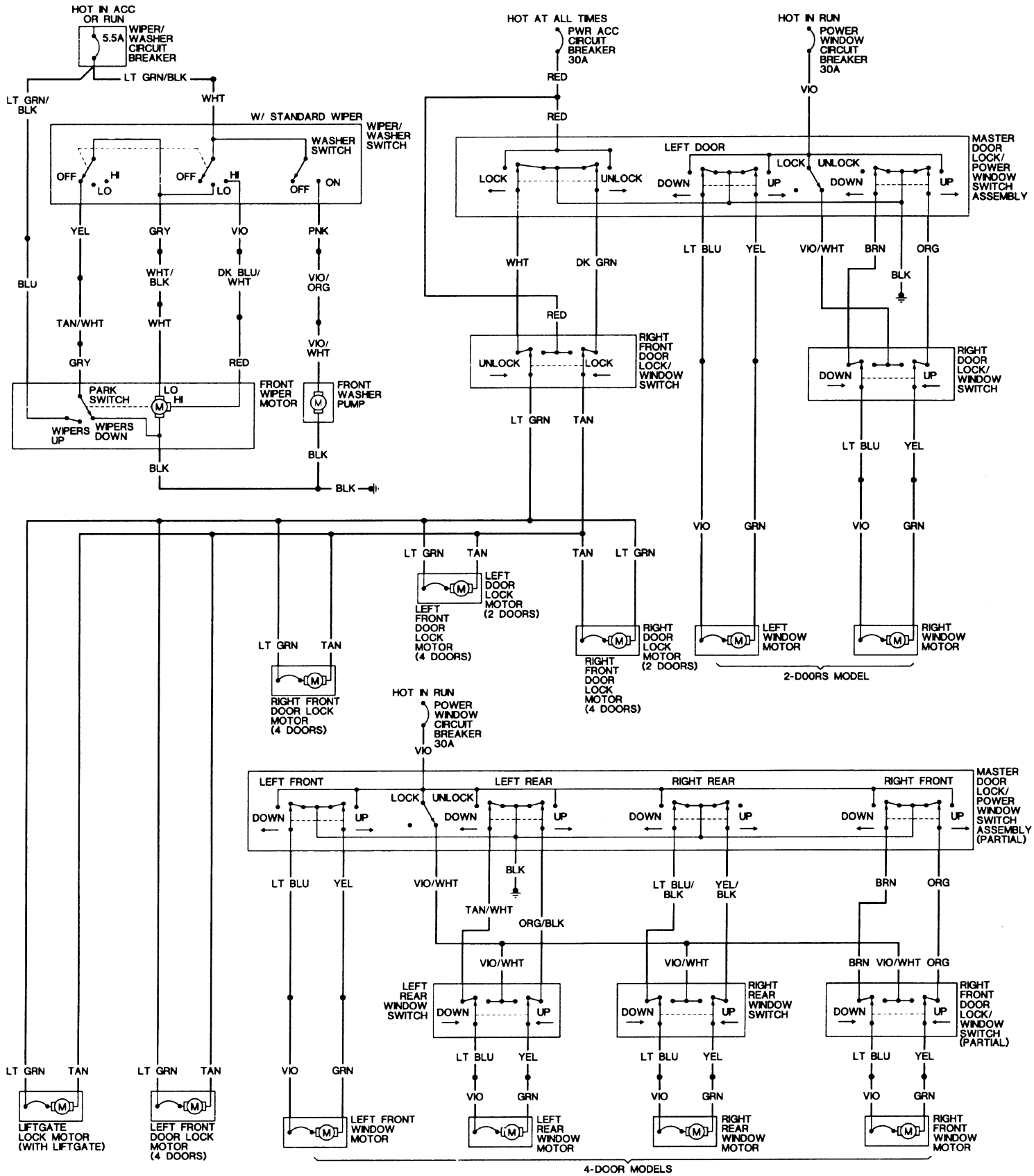

DIAGRAM 14